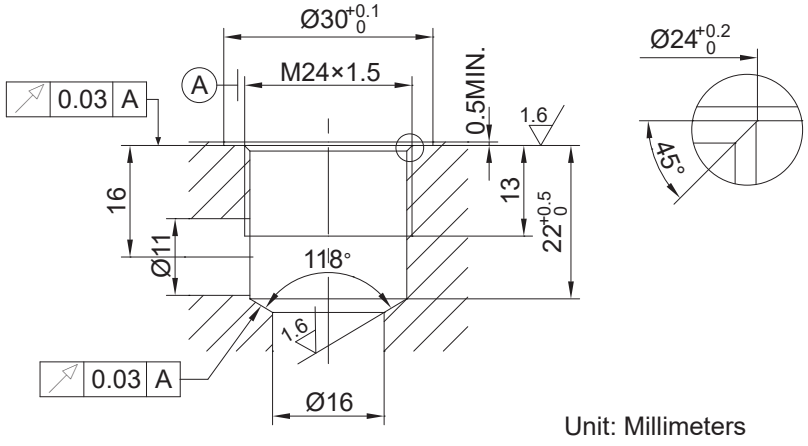

CAVITY:CDK3

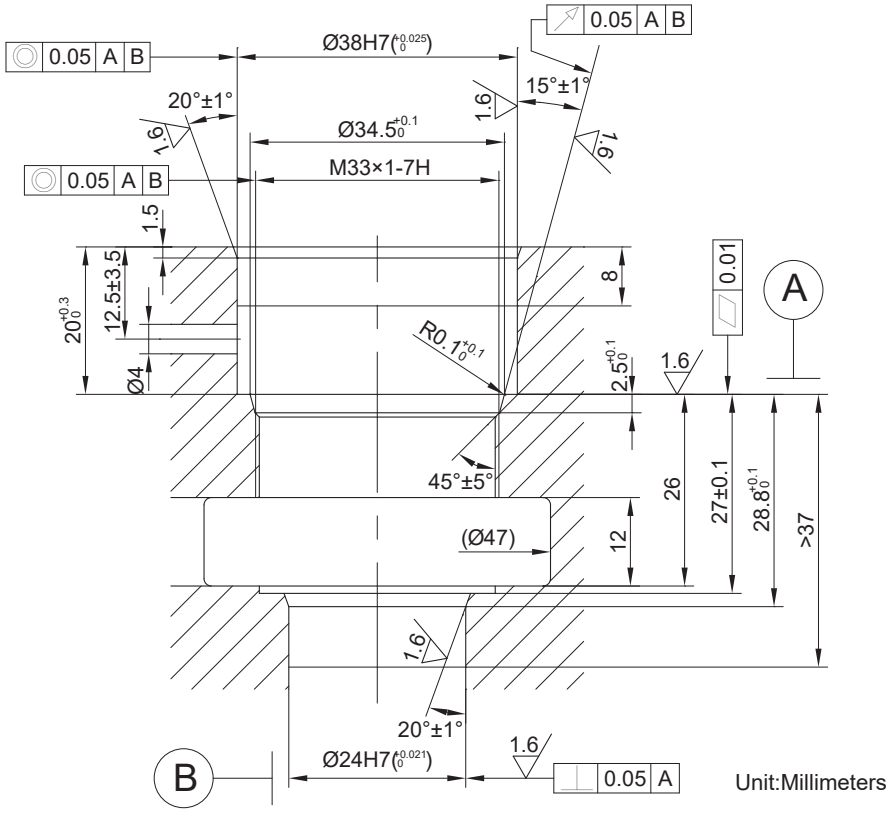

CAVITY:Rexroth-HK

M